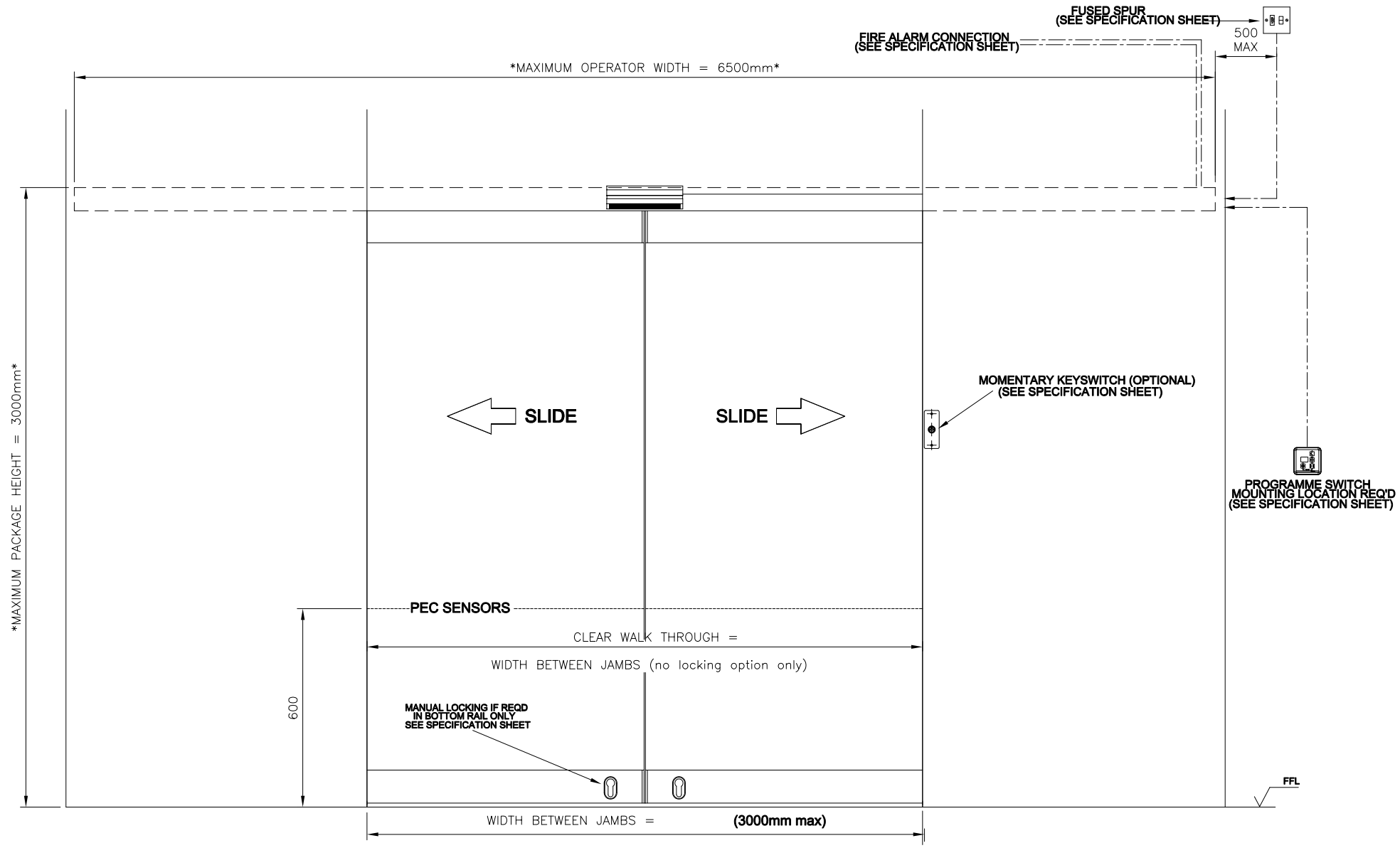

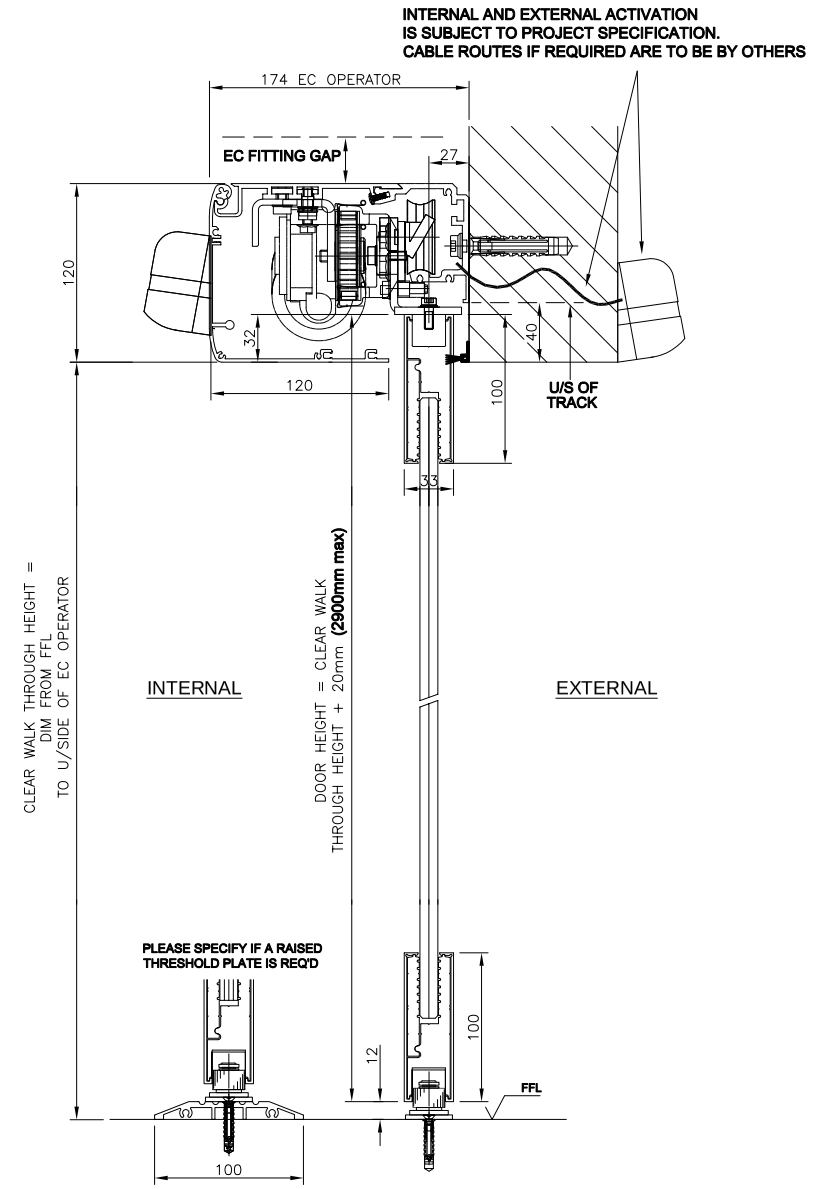

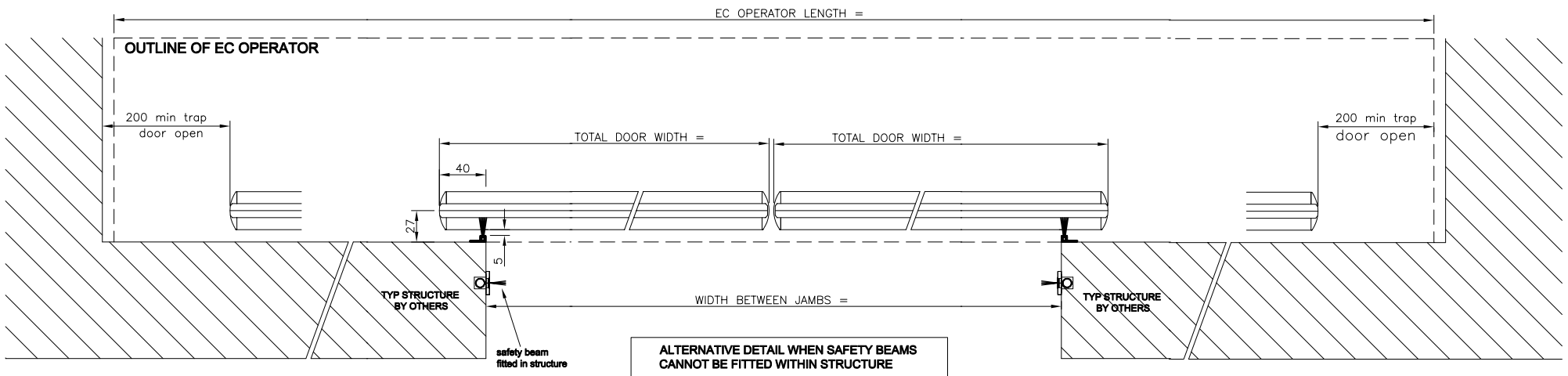

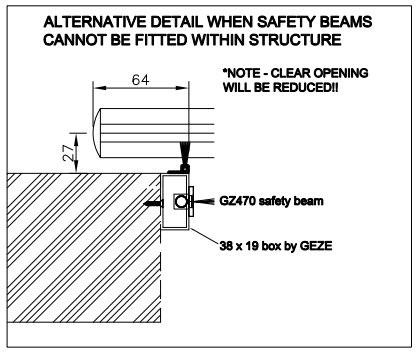

PROJECT SPECIFIC DETAILS

PROJECT :	
FINISH :	
GLASS :	
LOCKING :	
CONTROLS :	
ACTIVATION :	
SAFETY :	

Revision	Drawn	Date	Reason for Change
A	GH	30/6/10	SAFETY BEAM PROFILES REMOVED TRACK & COVER PROFILES REVISED

Drawing No.
EC-05

Title
EC Bi-Part Operator with
Doors in all glass AP sections

Drawn	Appd	Scale	Date
GH		NTS	AUG 09

GEZE UK Ltd
Blenheim Way
Fradley Park
Lichfield
Staffordshire.
WS13 8SY
www.geze.com
TEL 01543 443000
FAX 01543 443001

This drawing shows the actual stage of product development at the date indicated.
No claims or damages in any form can be made against GEZE as a result of the interpretation of this drawing. This drawing remains the property of GEZE and is made available to third parties only for the duration of contractual obligations. All rights connected with this drawing remain in possession of GEZE. This drawing may not be copied or handed over to third parties without the express consent of GEZE.